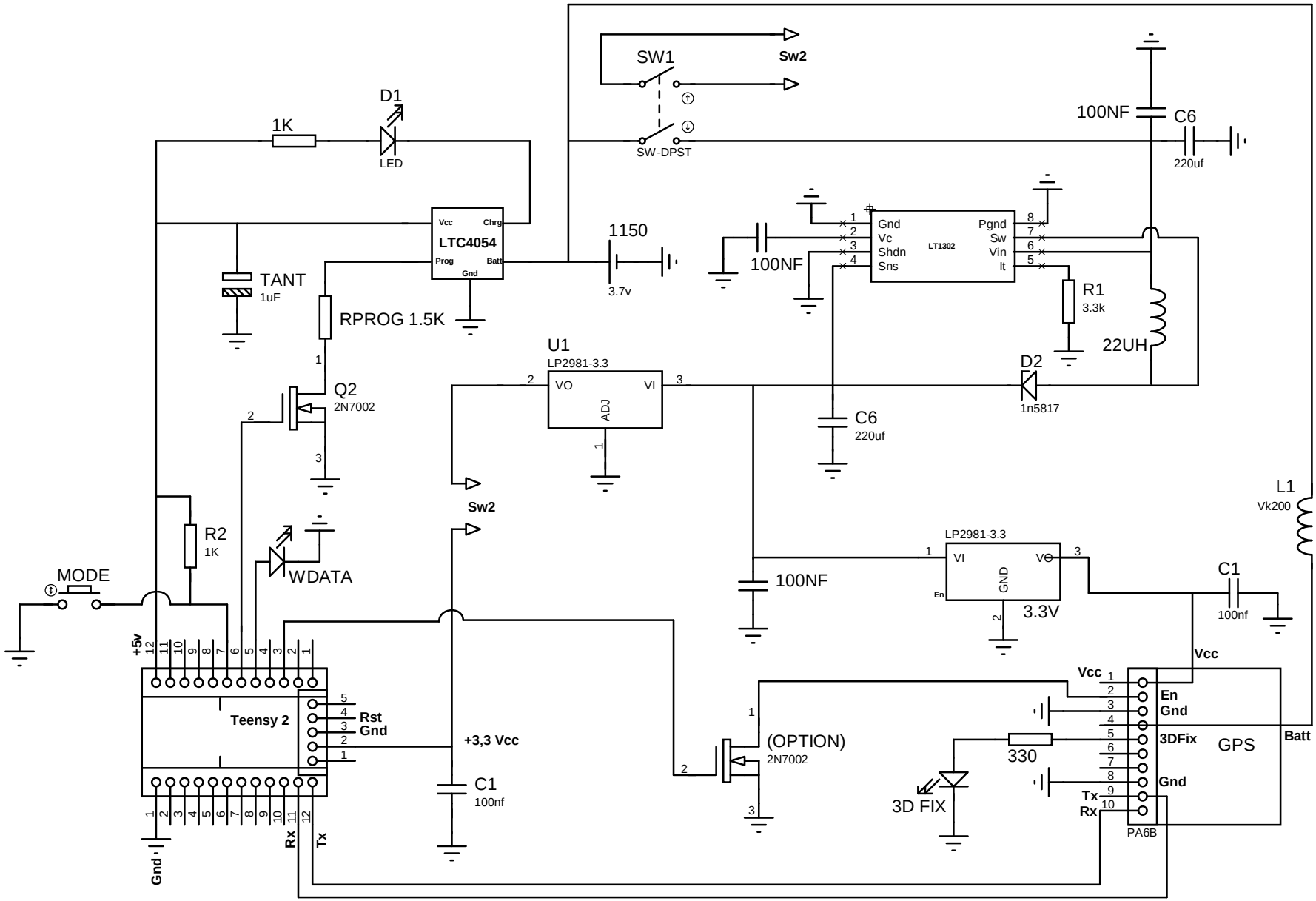
SW1
Sw2
SW-DPST
D1
LED
1K
100NF
C6
220uf
LTC4054
Vcc
Chrg
Prog
Batt
Gnd
1150
3.7v
TANT
1uF
RPROG 1.5K
Q2
2N7002
U1
LP2981-3.3
VO
VI
ADJ
LT1302
Gnd
Vc
Shdn
Sns
Pgnd
Sw
Vin
It
R1
3.3k
22UH
D2
1n5817
C6
220uf
L1
Vk200
R2
1K
WDATA
MODE
Sw2
LP2981-3.3
VI
VO
GND
En
3.3V
C1
100nf
100NF
+5v
Teensy 2
Rst
Gnd
+3,3 Vcc
C1
100nf
(OPTION)
2N7002
330
3D FIX
Vcc
En
Gnd
3DFix
Gnd
Tx
Rx
GPS
Batt
PA6B
Gnd
Rx
Tx